J & S Valve®

Butterfly Valve

Resilient Seated

Lug & Wafer

Size: 2" - 24"

Butterfly Valve

Series 2300 Wafer & 2500 Lug

Body:

Valve bodies will be Gray Iron or Ductile Iron.

Disc:

Valve disc manufactured of Stainless Steel, Bronze or Ductile Iron.

Stem:

300 Series Stainless Steel

Seat:

EPDM – Has good abrasion and tear resistance while offering excellent chemical resistance to a variety of acid and weak alkaline-based media. It also has exceptional weather aging and ozone resistance.

Viton® – Is DuPont's trademark name for Fluoroelastomer and is widely recognized for hot air service. This material also offers chemical resistance.

Actuators Available:

Lever, Manual Worm Gear, Hydraulic, or Electric Motor Operators.

J & S Valve®

INSTALLATION DIMENSIONS

SERIES 2300 WAFER

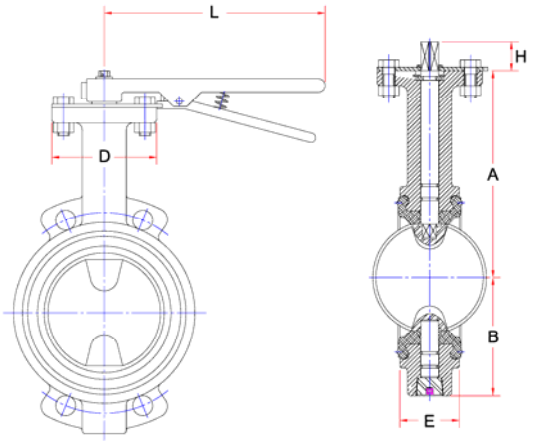

SERIES 2500 LUG

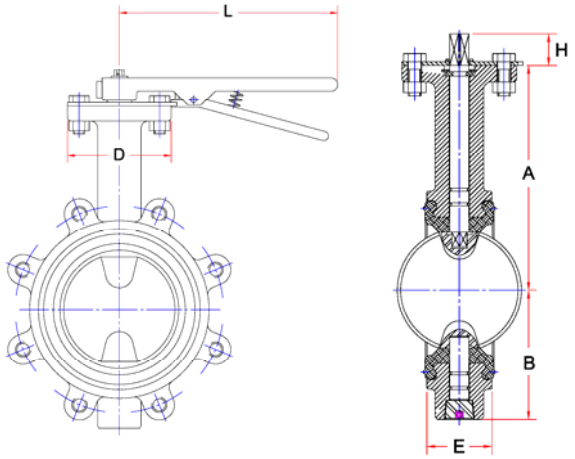

DIMENSIONS SERIES 2300 WAFER STYLE:

Size	Model	A	B	D	E	L	H	Weight (lbs.)
2”	2302	6⅜”	3⅛”	3½”	1⅝”	10⅜”	1⅛”	10
2½”	2325	6⅞”	3½”	3½”	1¾”	10⅜”	1⅛”	12
3”	2303	7⅛”	3¾”	3½”	1½”	10⅜”	1⅛”	13
4”	2304	7⅞”	4½”	3½”	2”	10⅜”	1⅛”	14
5”	2305	8½”	5¼”	3½”	2¼”	10⅜”	1⅛”	22
6”	2306	8⅞”	5½”	3½”	2¼”	12½”	1⅛”	27
8”	2308	9½”	6⅞”	3½”	2⅜”	12½”	1⅛”	38
10”	2310	11⅝”	7⅞”	3½”	2¾”	12½”	1⅛”	58
12”	2312	13¼”	9¼”	3½”	3⅛”	16⅜”	1⅛”	80

DIMENSIONS SERIES 2500 LUGSTYLE:

Size	Model	A	B	D	E	L	H	Weight (lbs.)
2”	2502	5½”	2⅝”	3½”	1¾”	10⅜”	1⅛”	10
2½”	2525	6”	3”	3½”	1¾”	10⅜”	1⅛”	12
3”	2503	6⅓”	3⅓”	3½”	1⅞”	10⅜”	1⅛”	13
4”	2504	7”	4”	3½”	2”	10⅜”	1⅛”	17
5”	2505	7½”	4¾”	3½”	2¼”	10⅜”	1⅛”	25
6”	2506	8”	5¼”	3½”	2¼”	12⅞”	1⅛”	30
8”	2508	9½”	5⅓”	5”	2⅜”	12⅞”	1⅛”	44
10”	2510	10¾”	7⅞”	5”	2¾”	12⅞”	1⅛”	63
12”	2512	12½”	9”	5”	3⅛”	16⅓”	1⅛”	85

Design and Materials Subject to Change Without Notice. Call for Verification and Any Updated Drawings

J & S Valve

INSTALLATION DIMENSIONS

SERIES 2500 LUG

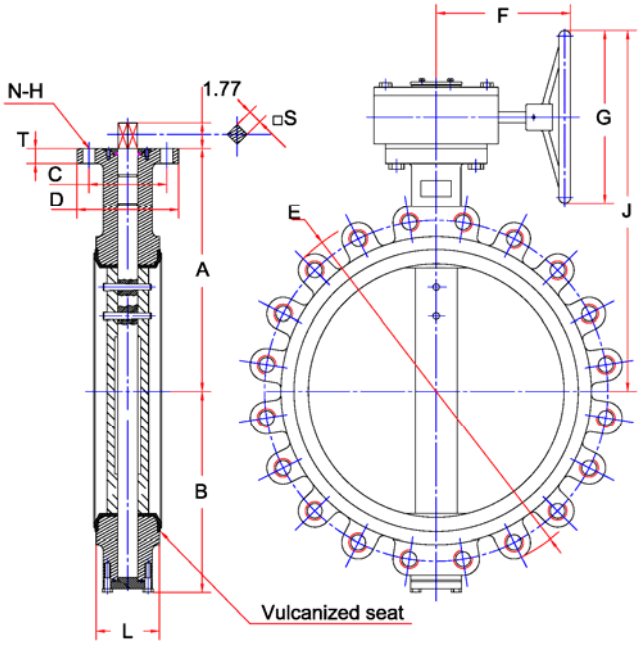

SERIES 2300 WAFER

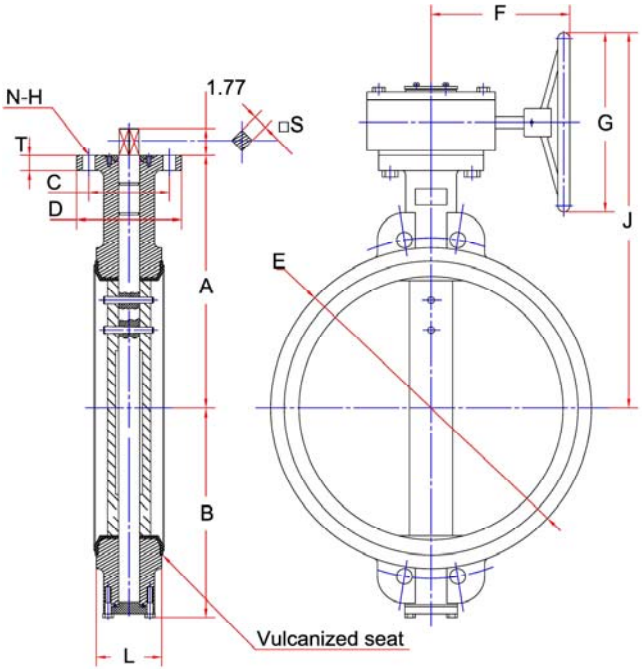

DIMENSIONS SERIES 2300 WAFER STYLE:													
Size	**Model**	**A**	**B**	**C**	**D**	**E**	**F**	**G**	**J**	**L**	**T**	**S**	**Weight (lbs.)**
14”	**2314GH**	14½”	11”	5”	5¾”	15¾”	8¾”	11¾”	22¼”	3”	1”	¾”	148
16”	**2316GH**	15¾”	12¼”	5½”	6¾”	18”	10½”	15¼”	26”	3½”	1”	1”	243
18”	**2318GH**	16⅝”	13⅜”	5½”	6¾”	20⅛”	10½”	15¼”	26¾”	4¼”	1”	1”	289
20”	**2320GH**	18¾”	15¼”	6½”	8¼”	23⅛”	9½”	15¼”	28¾”	5”	1”	1¾”	346
24”	**2324GH**	22⅛”	17¾”	6½”	8¼”	27”	9½”	15¼”	32”	6”	1⅛”	1¾”	489

DIMENSIONS SERIES 2500 LUGSTYLE:													
Size	**Model**	**A**	**B**	**C**	**D**	**E**	**F**	**G**	**J**	**L**	**T**	**S**	**Weight (lbs.)**
14”	**2514GH**	14½”	11”	5”	5¾”	20¾”	8¾”	11¾”	22¼”	3”	1”	¾”	179
16”	**2516GH**	15¾”	12¼”	5½”	6¾”	23⅝”	10½”	15¼”	26”	3½”	1”	1”	264
18”	**2518GH**	16⅝”	13⅜”	5½”	6¾”	26⅛”	10½”	15¼”	26¾”	4¼”	1”	1”	319
20”	**2520GH**	18¾”	15¼”	6½”	8¼”	28¾”	9½”	15¼”	28¾”	5”	1”	1¾”	397
24”	**2524GH**	22⅛”	17¾”	6½”	8¼”	33”	9½”	15¼”	32”	6”	1⅛”	1¾”	546

Gears and Actuator

Worm Gear

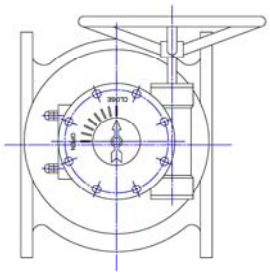

Electric Actuation

Worm Gears:

- J&S Valve's worm gear actuators provide precise quarter-turn actuation in accordance with AWWA Standards. Worm gears include externally adjustable mechanical stops to control end of valve travel. The worm gears are provided with position indicators. These gears are fusion bonded epoxy coated in accordance with AWWA C550, providing more protection and resulting in longer life.

Electric Actuators:

- Electric Actuators can be easily adapted to the valve allowing the valve to become integrated with the system while also allowing for remote operation. The actuators are built in accordance with AWWA Standard C540 for Electric Actuators and are equipped with thermal overloads, torque switches and limit switches to protect the actuator and valve. J&S Valve prefers to supply "smart" actuators which offer features that are ideal for the digital world.

Quality Commitment

Commitment to Quality and Technical Advancement

J&S Valve is committed to providing the highest quality valves for longer service life and is recognized around the world for manufacturing the most robust valves on the market. Providing 100% testing, rather than random testing, sets J&S apart. All valves are tested in accordance to the American Water Works Standards. J&S Valve strives to provide superior customer service and to provide quality products at competitive prices. J&S is committed to complete customer satisfaction.

J & S Valve Facilities

Dallas Area

Houston Area

SPECIFICATION

BUTTERFLY VALVE

SCOPE

1.1 This specification covers the design, manufacture, and testing of rubber seated butterfly valves.

STANDARDS, APPROVALS, AND VERIFICATION

2.1 The valves shall be designed, manufactured, and tested in accordance with ASME B16.5 and ASME B16.34.

CONNECTIONS

3.1 The valves shall be provided with lug or wafer style connections.

DESIGN

4.1 They shall be capable of sealing against full differential pressure in either flow direction.
4.2 Valve seat shall line the entire body of valve.
4.3 Shaft design shall be one piece design.

MATERIALS

5.1 Valves shall be Fusion Bonded Epoxy Coated.
5.2 Body shall be constructed of Ductile Iron.
5.3 Disc shall be constructed of Stainless Steel, Ductile Iron, or Bronze.
5.4 Valve Seats shall be EPDM or Buna-N.

OPTIONS

6.1 A pre-wired limit switch will be provided (when specified) to indicate open/ closed position to a remote location. The mechanical type limit switch shall be activated by the external arm and rated for NEMA 4, 6, or 6P and shall have U.L. rated 5 amps, 125 or 250 VAC contacts.

MANUFACTURE

7.1 Valves shall be hydrostatically shell tested per AWWA C504.
7.2 Valves shall be leak tested per AWWA C504.

J & S Valve®

Improving the Industry Standard!

J&S Valve shows its commitment to providing quality products by manufacturing with the highest grade materials and testing 100% of its valves (rather than random testing). J&S is a leader in the Waterworks Industry. We provide products and services that consistently meet and exceed our customers' needs as they relate to quality, performance, dependability, operation, and delivery.

Install Reliability
Install J&S Valve

J&S VALVE, INC.
2323 1st Street
Huffman, TX 77336
Ph: (281) 324-3990

wwwJandSvalve.com
sales@jandsvalve.com

wasda

CLASSIFIED UL WATER QUALITY